A. Uberti S.p.A.

Via Artigiani, 1 - Gardone V.T. (Brescia) - ITALY

# Instruction Manual

BEFORE REMOVING THE FIREARM FROM THIS PACKAGE, READ & UNDERSTAND THE PRECAUTIONS IN THE INSTRUCTIONS MANUAL

## MOD. 1873

### SPECIAL SAFETY INSTRUCTIONS

1) Uberti lever action rifles should never be carried with a cartridge in the chamber.
2) Carrying this style of rifle with a cartridge in the chamber can result in an accidental discharge if the firearm is accidentally dropped or if the hammer is struck.
3) The lever locking mechanism is designed to prevent an accidental discharge. However, no mechanical device is foolproof and, accordingly, these procedures must be followed.
4) Due to the fact that in a tubular magazine rifle the cartridges are stacked one behind the other, only factory ammunition should be used.
5) We recommend against using old ammunition in these rifles as primers, powder and brass cartridge cases can deteriorate and cause damage to the rifle or injury to the shooter or others.
6) Uberti assumes no liability for incidents occurring through the use of reloaded ammunitions.
Use **ONLY COMMERCIALLY** loaded cartridges that have been loaded in accordance with SAAMI-C.I.P. standards.

## MOD. 1873 RIFLE

| N. | Code No. | Q.ty | Description |
|---|---|---|---|
| 1 | 0220001 | 1 | Frame .38Sp Assy (1 + 73 + 74) |
| 2 | 0200002 | 1 | Hammer Assembly |
| 3 | 0252003 | 1 | Barrel .38 Sp. 24 1/4" |
| 7 | 0220007 | 1 | Carrier Block .38Sp - 32/20 |
| 10 | 0200010 | 1 | Trigger |
| 15 | 0202015 | 1 | Sight |
| 19 | 0200019 | 1 | Trigger Spring |
| 20 | 0200020 | 1 | Main Spring |
| 36 | 0200036 | 1 | Main Spring Screw |
| 55 | 242055 | 1 | Rear Assembly |
| 57 | 0202057G | 1 | Rough Butt Stock |
| 57 | 0202057 | 1 | Polished Butt Stock and Butt Plate |
| 58 | 0202058 | 1 | Butt Plate (Rough) |
| 61 | 0242061 | 1 | Rear Sight |
| 62 | 0200062 | 2 | Butt Plate Screw |
| 63 | 0200063 | 1 | Tang Screw |
| 67 | 0200067 | 1 | Firing Pin Extension |
| 68 | 0202068G | 1 | Rough Forend |
| 68 | 0202068 | 1 | Polished Forend |
| 72 | 0200072 | 1 | Cam Lever |
| 73 | 0220073 | 1 | Right Side Plate (Rough) |
| 74 | 0200074 | 1 | Left Side Plate (Rough) |
| 79 | 0220079 | 1 | Extractor .38Sp - 32/20 |
| 83 | 0220083 | 1 | Right Rear Link Assembly (83 + 85) |
| 84 | 0220084 | 1 | Left Rear Link Assembly (84 + 86) |
| 85 | 0220085 | 1 | Right Front Link |
| 86 | 0220086 | 1 | Left Front Link |
| 89 | 0200089 | 1 | Lever |
| 90 | 0200090 | 1 | Lifter Arm |
| 92 | 0200092 | 1 | Right Lever Spring |
| 93 | 0200093 | 1 | Left Lever Spring |
| 95 | 0070016 | 1 | Firing Pin Spring |
| 96 | 0230096 | 1 | Magazine Spring |
| 97 | 0220097 | 1 | Breech Block .38Sp - 32/20 |
| 98 | 0220098 | 1 | Firing Pin |
| 99 | 0200099 | 1 | Trigger Pin |
| 100 | 0200100 | 1 | Hammer Pin Screw |
| 101 | 0200101 | 1 | Lever Screw |
| 104 | 0200104 | 1 | Firing Pin Stop |
| 105 | 0200105 | 2 | Rear Link Pin |
| 106 | 0200106 | 2 | Link Pin |
| 107 | 0200107 | 1 | Lever Pin |
| 108 | 0220108 | 1 | Extractor Pin |
| 109 | 0200109 | 1 | Cam Lever Pin |
| 112 | 0200112 | 1 | Hammer Link Pin |
| 113 | 0220113 | 1 | Magazine Follower .38Sp - 32/20 |
| 114 | 0230114 | 1 | Magazine Tube Plug |
| 115 | 0200115 | 1 | Hammer Link |
| 118 | 0232118 | 1 | Magazine Tube (Polished) |
| 119 | 0400692 | 2 | Rear Screw |
| 123 | 0200123 | 1 | Side Plate Screw |
| 124 | 0200124 | 2 | Lever Spring Screw |
| 127 | 0220127 | 1 | Ladle |
| 128 | 0220128 | 1 | Ladle Screw |
| 216 | 0202216 | 1 | Forend Protection |
| 225 | 0202225 | 1 | Forend Protection Bearing |
| 237 | 0200237 | 1 | Lever Hook Spring |
| 239 | 0238062 | 1 | Triggerguard Screw |
| 263 | 0200263 | 1 | Trigger Spring Screw |
| 275 | 0202275 | 1 | Magazine Tube Bearing |
| 281 | 0202281 | 1 | Magazine Tube Bearing Pin |
| 283 | 0202283 | 2 | Forend Protection Screw |
| 542 | 0200542 | 1 | Hook Lever |
| 552 | 0070035 | 1 | Hook Lever Spring Screw |
| **ALTERNATIVES COD. 0217 - 0219 - 0221 - 0224 - 0225 - 0226 - 0227 - 0229 0231 - 0232 - 0234** | | | |
| 1 | 0230001 | 1 | Frame .44/40-.45LC Assembly (1+ 73+74) |
| 3 | 0282003 | 1 | Barrel .45 Colt 24 1/4" (Mod.0229) |
| 3 | 0242003 | 1 | Barrel .44/40 24 1/4" (Mod.0232) |
| 3 | 0249003 | 1 | Barrel .44Sp 24 1/4" (Mod.0219) |
| 3 | 0264003 | 1 | Barrel .38/40 24 1/4" (Mod.0224) |
| 3 | 0255003 | 1 | Barrel .32/20 24 1/4" (Mod.0226) |
| 3 | 0285003 | 1 | Barrel 20" .44 Sp. (Mod.0217) |
| 3 | 0221003 | 1 | Barrel 20" .38 Sp. (Mod.0221) |
| 3 | 0283003 | 1 | Barrel 20" .38/40 (Mod.0225) |
| 3 | 0293003 | 1 | Barrel 20" .32/20 (Mod.0227) |
| 3 | 0241003 | 1 | Barrel 20" .44/40 (Mod.0231) |
| 3 | 0281003 | 1 | Barrel 20" .45 LC (Mod.0234) |
| 7 | 0230007 | 1 | Carrier Block .44Sp-.44/40-.45LC-.38/40 |
| 79 | 0230079 | 1 | Extractor .44Sp-.44/40-.45LC-.38/40 |
| 97 | 0230097 | 1 | Breech Block .44Sp-.44/40-.45LC-.38/40 |
| 108 | 0230108 | 1 | Extractor Pin .44/40-.45 Colt |
| 113 | 0230113 | 1 | Magazine Follower .44Sp-.44/40-.45LC-.38/40 |
| 118 | 0241118 | 1 | Magazine Tube Short 20" |

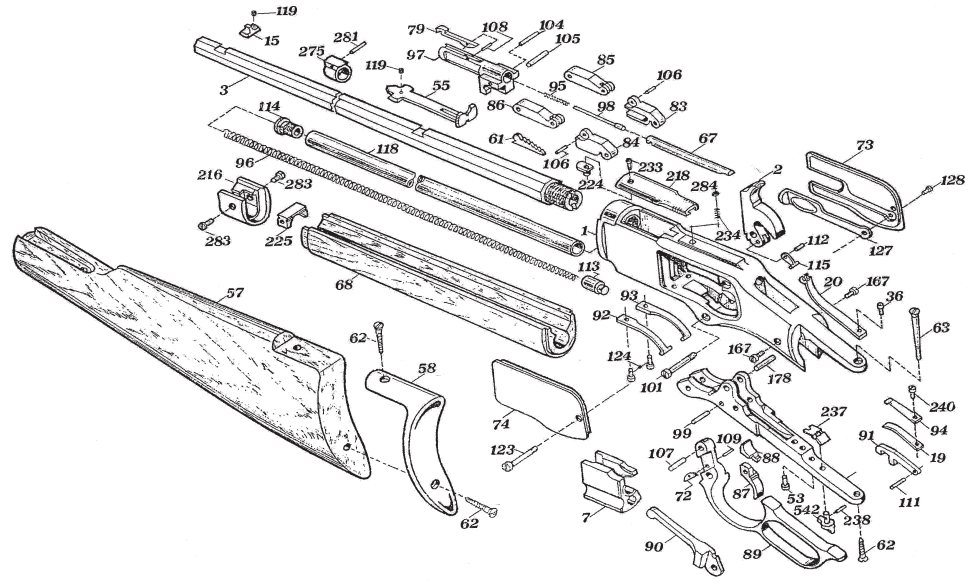

### TO LOAD THE FIREARM

(1) Turn the lever locking latch to the release position (Fig. 1).
Releasing the latch should allow the lever to go down approximately 1/2" (Fig. 2). Do not push the lever forward.

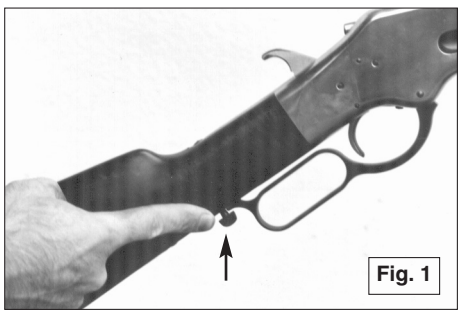
Fig. 1

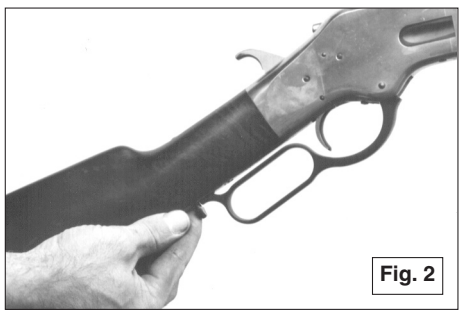
Fig. 2

(2) Load the tubular magazine by pressing the cartridge into the ladle, which is located on the right side of the receiver. Push the cartridge forward and insert it into the tubular magazine (Fig. 3).

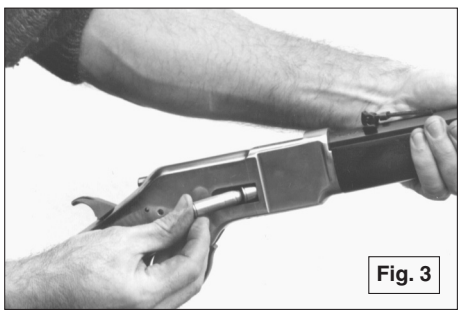
Fig. 3

Fig. 4

When loading cartridges through the ladle, leave the rim of each cartridge protruding sufficiently to hold the ladle open.
When loading the last cartridge, insert it fully into the magazine thereby allowing the ladle to close. For optimum reliability, only load 10 cartridges in the 24" rifle. Models equipped with the 30" barrel should be limited to 12 cartridges; the 19" and 20" carbines should be limited to 8 cartridges. Overloading the magazine may result in improper feeding.
(3) When you are ready to actually fire the firearm, the lever is pushed forward as far as it will go and is then pulled straight back. Your finger should **NOT TOUCH THE TRIGGER** while manipulating the lever. (Fig. 4).
The rifle will now be fully cocked and will fire when the trigger is pulled. If the lever does not go forward, release the loading lever latch by turning the small knob perpendicular to the rifle.

(4) These firearms have been equipped with an additional safety system (Fig. 5), which should prevent the firearm from firing until the lever is squeezed flush with the frame (Fig. 6). This safety, however, is not designed to replace basic safe firearms handling. Accordingly, NEVER touch the trigger until you intend to fire.

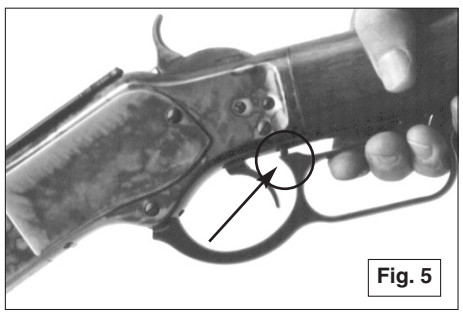
Fig. 5

Fig. 6

(5) After you have fired the first shot, the next cartridge is loaded by repeating step 3.

### UNLOADING THE FIREARM

(6) To unload the firearm it is essential that the lever not be squeezed flush with the frame, as doing so would disengage the safety lock.
(7) With the firearm pointed in a safe direction, place your fingers through the rear portion of the loading lever. Be sure your first and second fingers are inside the lever loop. **DO NOT TOUCH THE TRIGGER**. Then push the lever straight forward and then pull it back. The cartridge that was in the chamber should be automatically ejected by the firearm and another cartridge from the magazine will be automatically loaded into the firearm. (Fig. 7).

Fig. 7

(8) Repeat step 7 until all cartridges have been ejected from the firearm.
After all cartridges have been ejected, cycle the action four or five more times as described in step 7 as an added precaution to assure that all rounds were ejected.
(9) After step 8, move the lever to the forward position while visually inspecting **both the chamber and the carrier block**, to confirm that no cartridges are still in the firearm.
(10) Pull the lever to the rear, squeeze the loading lever flush with the frame and with your thumb on the hammer, pull the trigger and with your thumb slowly lower the hammer.
(11) We suggest, when the firearm is not in use, that the loading lever locking mechanism be left disengaged.